EVERLIGHT ELECTRONICS CO.,LTD.

Technical Data Sheet(Preminary)

Side View SMD LEDs

57-21SUGC/B013/TR8

Features

- High Luminous Intensity
- High Efficiency
- Pb-free.
- The product itself will remain with RoHS compliant version

Descriptions

The 57-21series is available in soft orange, green,blue and yellow. Due to the package design, the LED has wide viewing angle and optimized light coupling by inter reflector. This feature makes ideal for light pipe application. The low current requirement makes this device ideal for portable equipment or any other application where power is at a premium.

Applications

- OA Equipment
- Backlighting of Full Color LCD
- Automotive Equipment
- Replacement of Conventional Light Bulbs and Fluorescent Lamps

Device Selection Guide

Chip		Lens Color
Material	**Emitted Color**	
InGaN/SiC	Brilliant Green	Water Clear

Package Dimensions

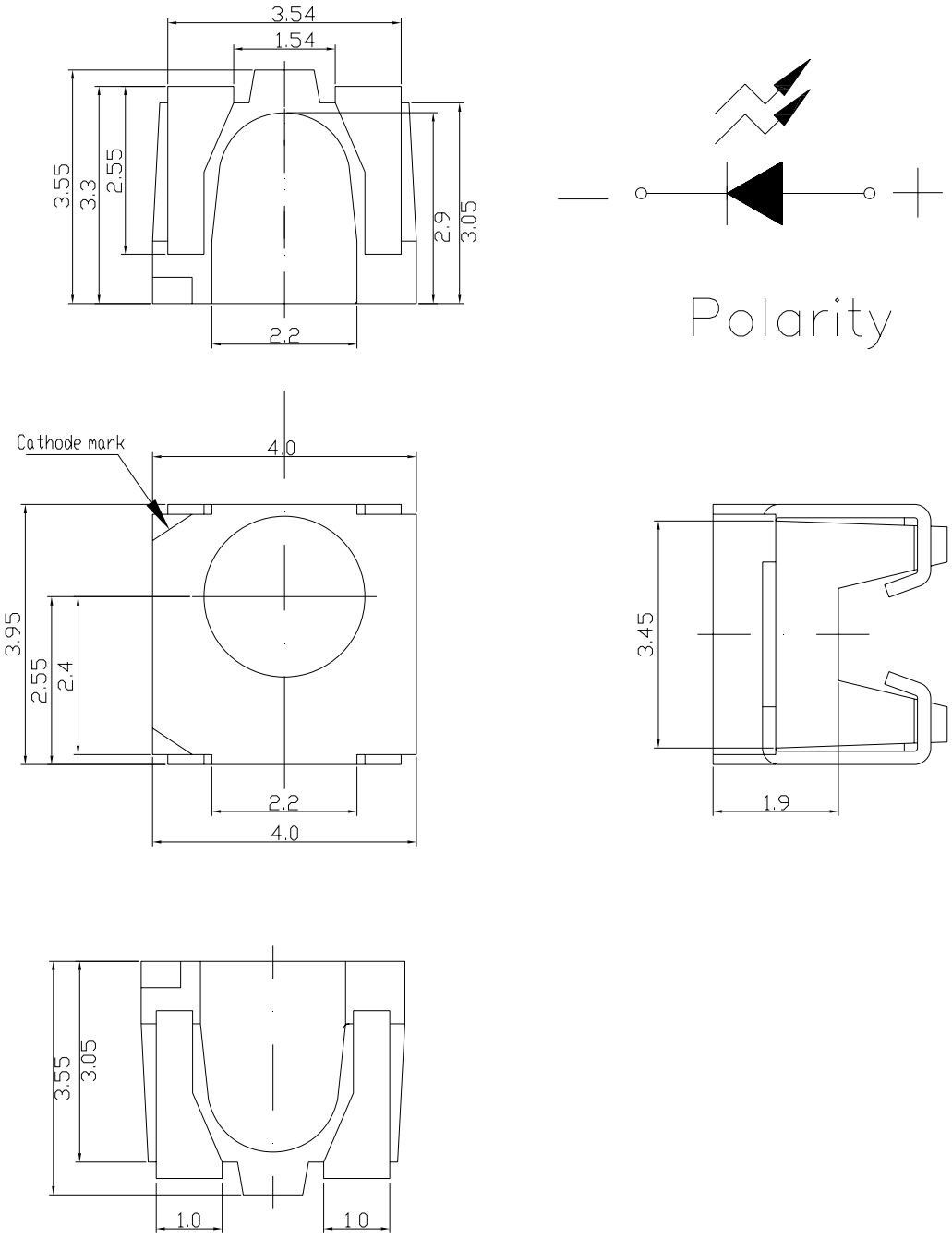

Note: The tolerances unless mentioned is ±0.1mm ,Unit = mm

Absolute Maximum Ratings (Ta=25℃)

Parameter	Symbol	Rating	Unit
Reverse Voltage	V_R	12	V
Forward Current	I_F	30	mA
Peak Forward Current (Duty 1/10 @1KHz)	I_{FP}	100	mA
Power Dissipation	Pd	130	mW
Electrostatic Discharge(HBM)	ESD	2000	V
Junction Temperature	Tj	125	℃
Operating Temperature	Topr	-40 ~ +100	℃
Storage Temperature	Tstg	-40 ~ +110	℃
Soldering Temperature	Tsol	Reflow Soldering : 260 ℃ for 10 sec. Hand Soldering : 350 ℃ for 3 sec.	

Electro-Optical Characteristics (Ta=25℃)

Parameter	Symbol	Min.	Typ.	Max.	Unit	Condition
Luminous Intensity	Iv	90	-----	180	mcd	I_F=20mA
Viewing Angle	$2\theta_{1/2}$	-----	120	-----	deg	I_F=20mA
Peak Wavelength	λp	-----	518	-----	nm	I_F=20mA
Dominant Wavelength	λd	519	-----	537	nm	I_F=20mA
Spectrum Radiation Bandwidth	$\triangle\lambda$	-----	36	-----	nm	I_F=20mA
Forward Voltage	V_F	2.7	-----	3.7	V	I_F=20mA
Reverse Current	I_R	-----	-----	10	μA	V_R=12V

Notes:

1.Tolerance of Luminous Intensity ±11%

2.Tolerance of Dominant Wavelength ±1nm

3.Tolerance of Forward Voltage ±0.1V

57-21SUGC/B013/TR8

Bin Range Of Dominant Wavelength

Bin Code	Min	Max	Unit	Condition
3	519	525	nm	I_F=20mA
4	525	531		
5	531	537		

Bin Range Of Luminous Intensity

Bin Code	Min	Max	Unit	Condition
Q2	90	112	mcd	I_F=20mA
R1	112	140		
R2	140	180		

Notes:

1.Tolerance of Luminous Intensity ±11%

2.Tolerance of Dominant Wavelength ±1nm

Typical Electro-Optical Characteristics Curves

Typical curve of spectral distribution:

V(λ)=Standard eye response curve

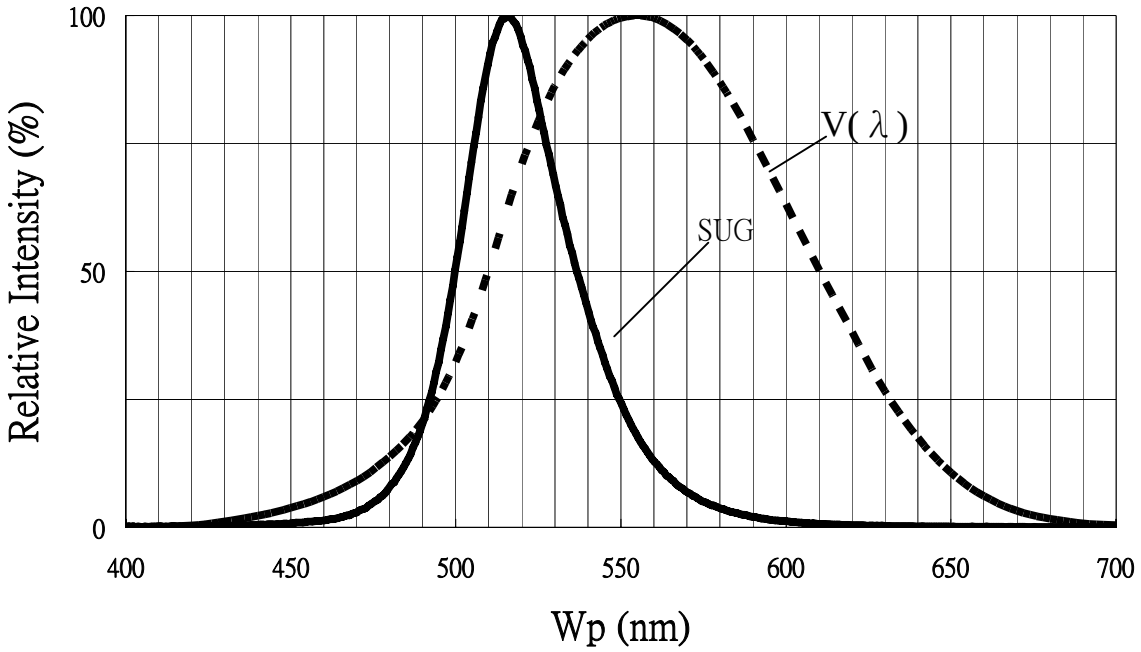

Diagram characteristics of radiation:

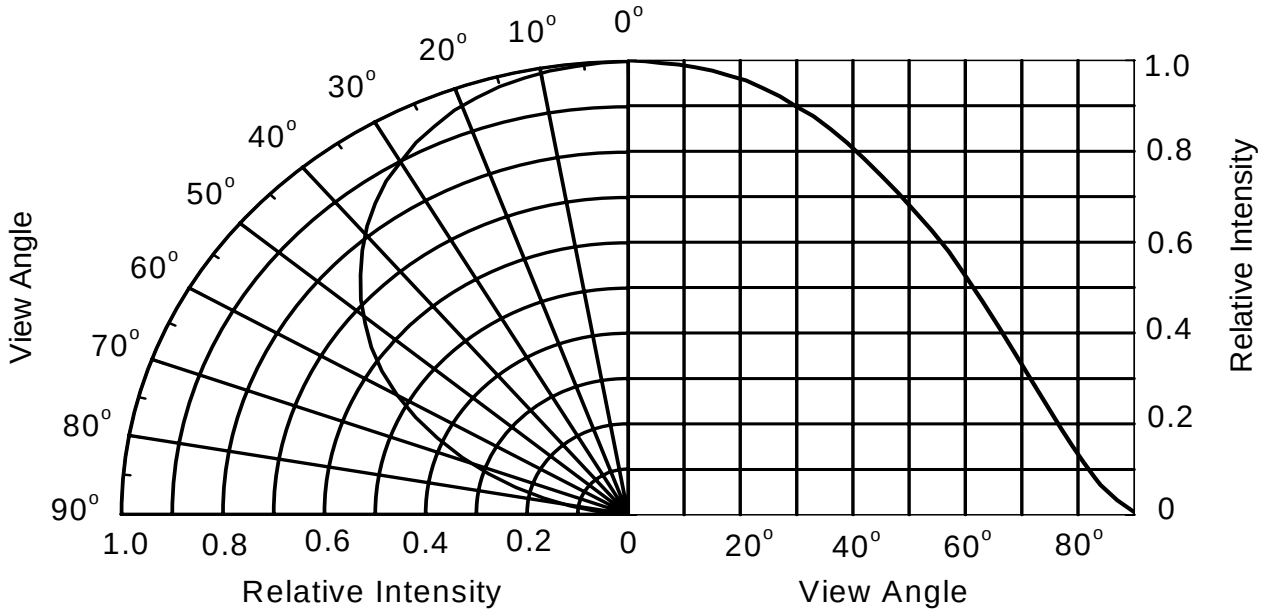

Forward Current vs. Forward Voltage Ta=25℃

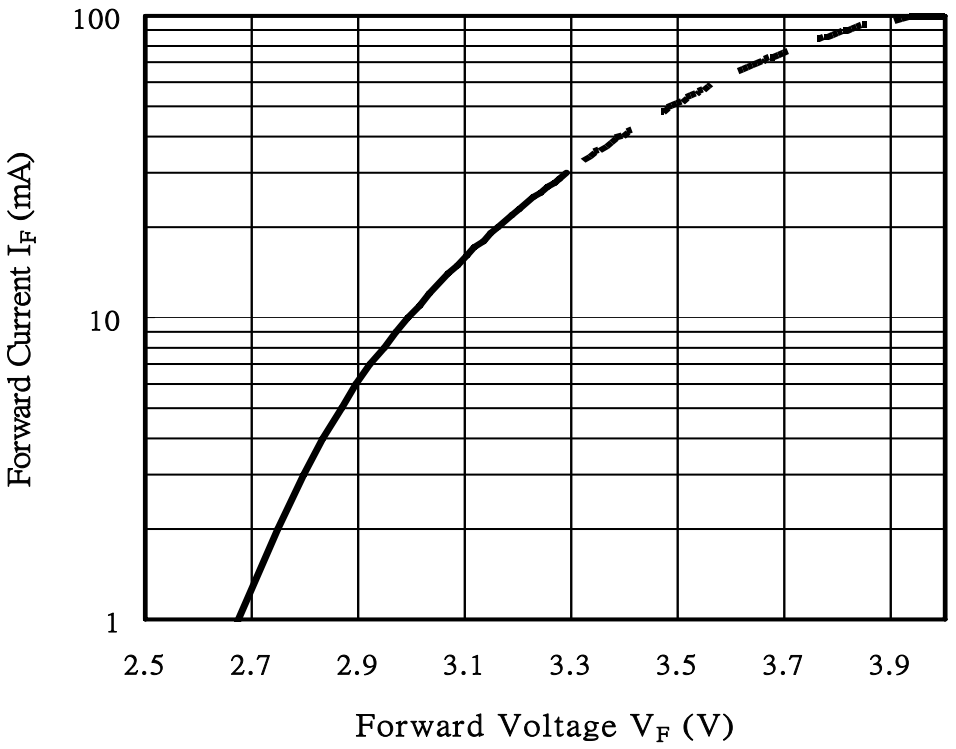

Forward current v.s. ambient temp.

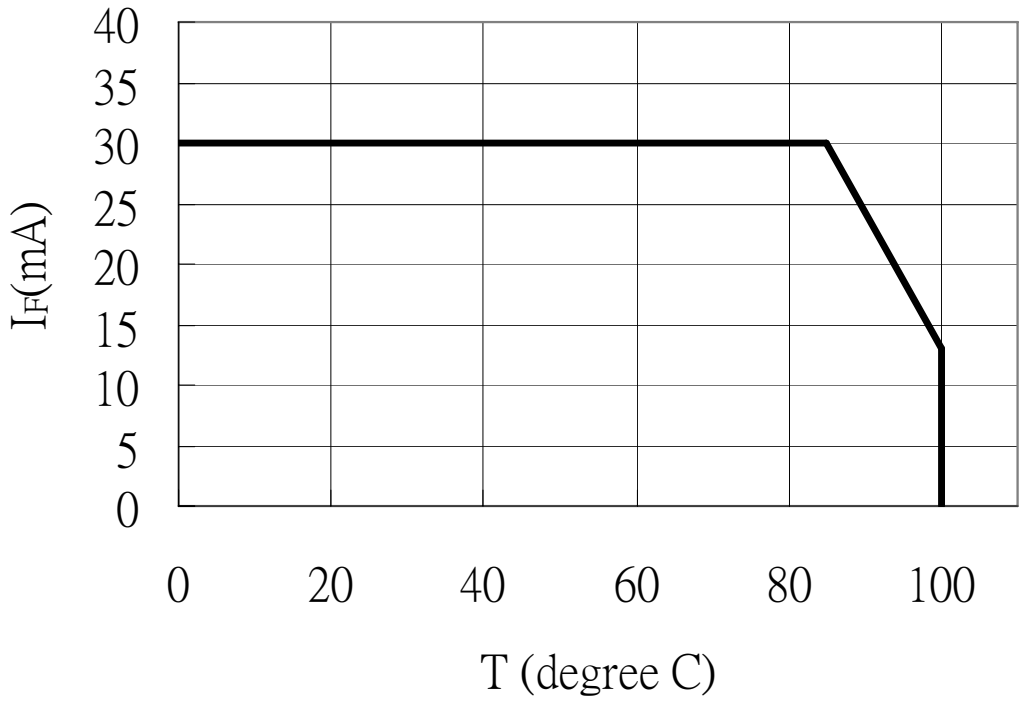

Label explanation

CAT: Luminous Intensity Rank

HUE: Dom. Wavelength Rank

REF: Forward Voltage Rank

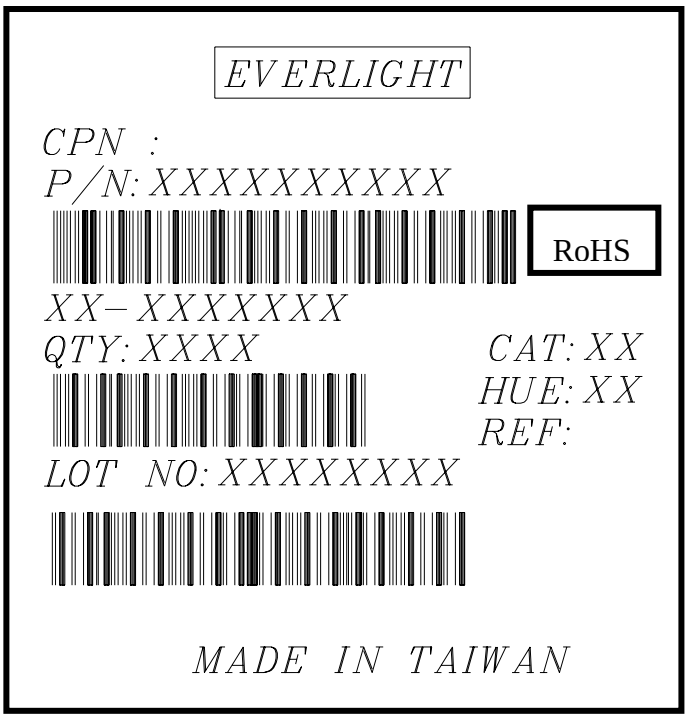

Reel Dimensions

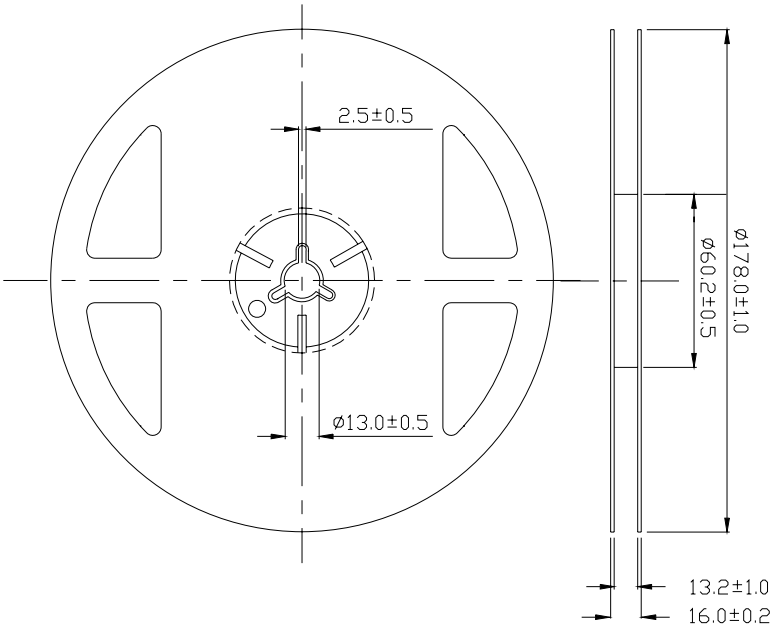

Note: The tolerances unless mentioned is ±0.1mm ,Unit = mm

57-21SUGC/B013/TR8

Carrier Tape Dimensions: Loaded quantity 800 PCS per reel.

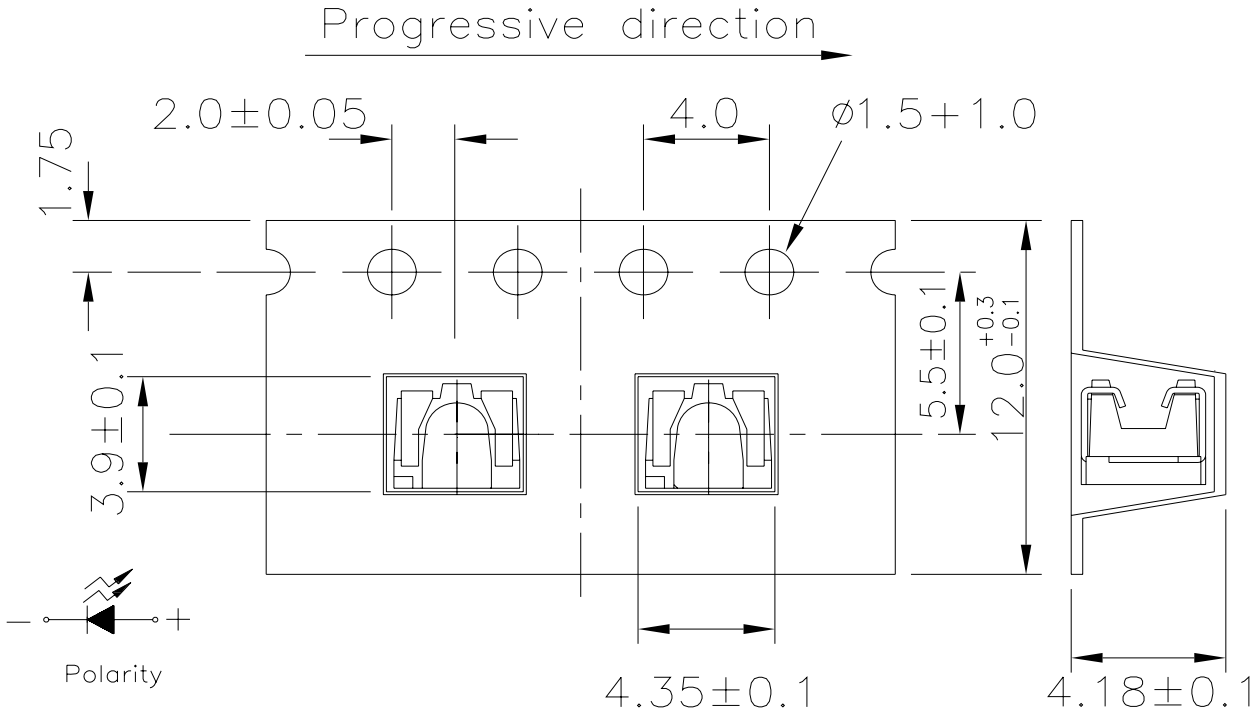

Note: The tolerances unless mentioned is ±0.1mm ,Unit = mm

Moisture Resistant Packaging

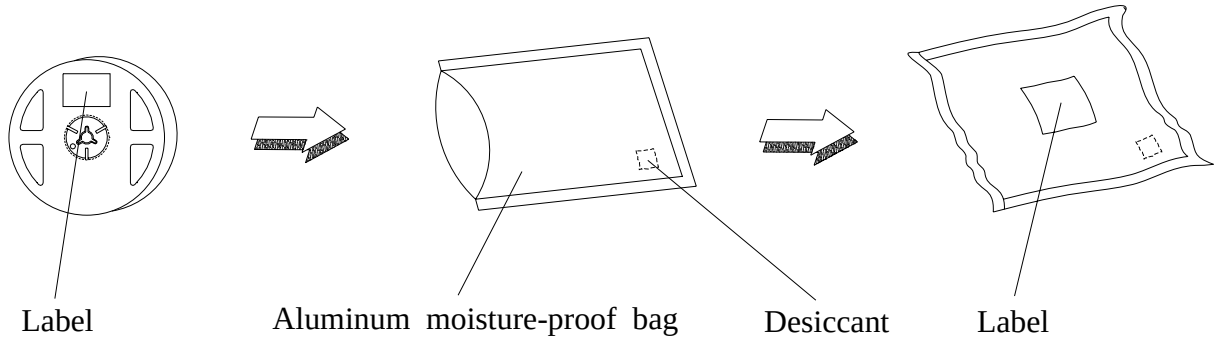

Precautions For Use

1. Over-current-proof

Customer must apply resistors for protection, otherwise slight voltage shift will cause big current change (Burn out will happen).

2. Storage

2.1 Do not open moisture proof bag before the products are ready to use.

2.2 Before opening the package: The LEDs should be kept at 30℃ or less and 90%RH or less.

2.3 After opening the package: The LED's floor life is 1 year under 30 deg C or less and 60% RH or less. If unused LEDs remain, it should be stored in moisture proof packages.

2.4 If the moisture absorbent material (silica gel) has faded away or the LEDs have exceeded the storage time, baking treatment should be performed using the following conditions.
Baking treatment : 60±5℃ for 24 hours.

3. Soldering Condition

3.1 A. Pb-free solder temperature profile

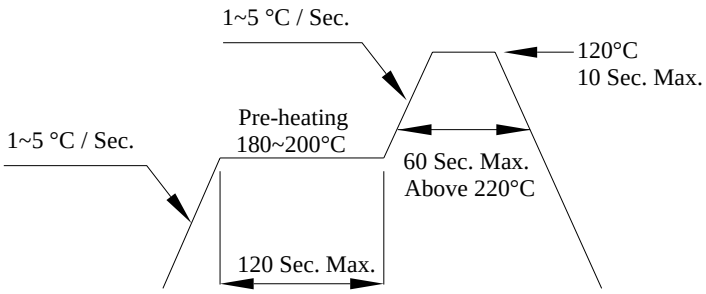

B. Recommend soldering pad

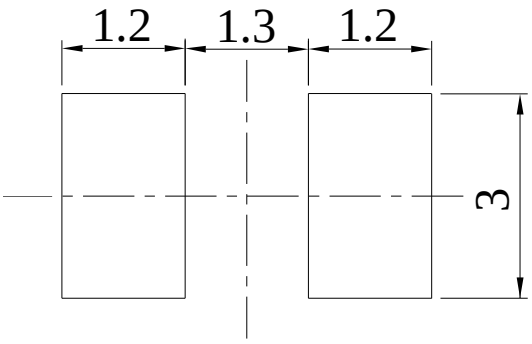

3.2 Reflow soldering should not be done more than two times.
3.3 When soldering, do not put stress on the LEDs during heating.
3.4 After soldering, do not warp the circuit board.

4.Soldering Iron

Each terminal is to go to the tip of soldering iron temperature less than 350℃ for 3 seconds within once in less than the soldering iron capacity 25W. Leave two seconds and more intervals, and do soldering of each terminal. Be careful because the damage of the product is often started at the time of the hand solder.